NOTES: UNLESS OTHERWISE SPECIFIED

1. CORNERS DRAWN SHARP TO BE R.005 MAXIMUM.
2. EXTERIOR SURFACE TEXTURE TO BE LIGHT EDM FINISH. EQUIVELANT TO MT-11010.
3. INTERIOR SURFACE TEXTURE TO BE: NONE.
4. ALL INSIDE RADII .010R. ALL OUTSIDE RADII .020R MAX, UNLESS OTHERWISE SPECIFIED.
5. ALL EXTERNAL DIMENSIONS AFFECTED BY THE DRAFT APPLY AT THE LARGE END OF THE FEATURE, AND ALL INTERNAL FEATURES AFFECTED BY THE DRAFT APPLY AT THE SMALL END OF THE FEATURE UNLESS OTHERWISE SPECIFIED.
6. 1 DEGREE DRAFT IN THE DIRECTION OF PULL IS PERMISSIBLE UNLESS OTHERWISED SPECIFIED.
7. THIS ENCLOSURE IS A SNAP FIT ASSEMBLY. FOR PERMANENT CLOSURE: A DROP OF ADHESIVE IS REQUIRED.
8. MATERIAL / COLOR: ABS PLASTIC IS STANDARD IN BLACK OR WHITE. CUSTOM MATERIALS AND COLORS ARE AVAILABLE UPON REQUEST FOR QUOTE.
9. PCB SIZES ARE RECOMMENDATIONS ONLY. FINAL SIZES AND VERIFICATION OF IT'S FIT ARE THE SOLE RESPONSIBILITY OF OEM.
10. STANDARD OR CUSTOM LABEL RECESSES ARE AVAILABLE UPON REQUEST FOR QUOTE.

REVISION

REV.	DRAWN BY	ECO No	DESCRIPTION	DATE	APPROVED
1	M BOYER		PRELIMINARY RELEASE	28-Jan-09	D.C.
1.1	M BOYER		UPDATE FORMAT	20-Mar-10	

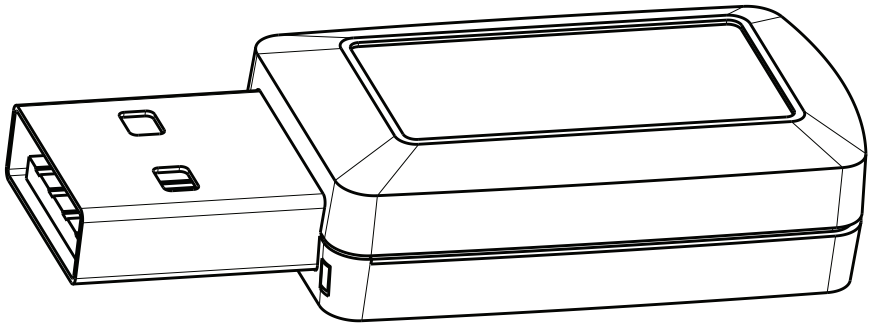

SCALE 2.500

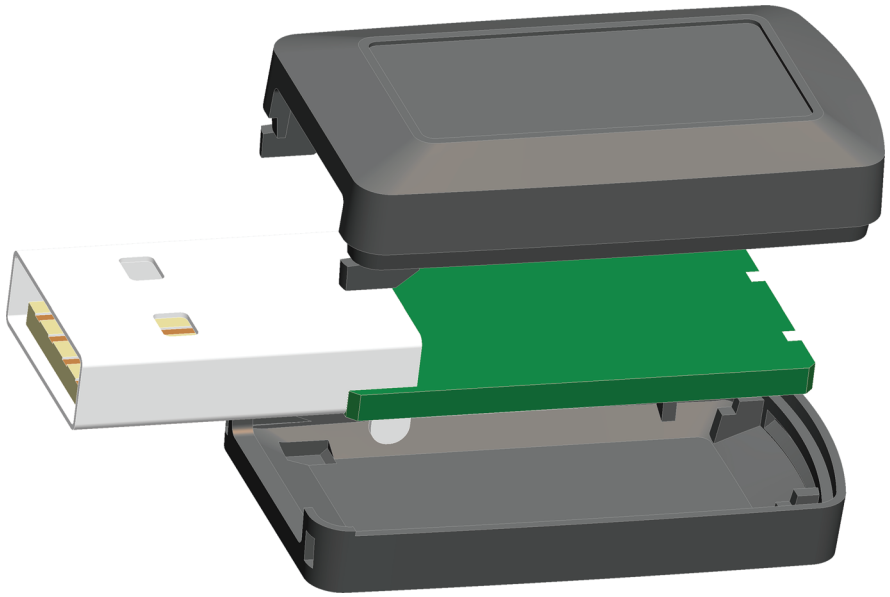

SCALE 2.500

P120704(X) CONFIGURATIONS:
S = STANDARD (NO MOLDED OPENINGS)
U = USB OPENING INCLUDED

ITEM	FILE NAME	DESCRIPTION	MATERIAL	COLOR	QTY.
3	120704_CASE-PCB	P120704 PCB	.062" THICK	REFERENCE ONLY	1
2	120704_CASE-COVER	P120704X COVER - STANDARD	ABS	BLACK	1
1	120704_CASE-BASE	P120704X BASE - STANDARD	ABS	BLACK	1

BILL OF MATERIALS

THIRD ANGLE PROJECTION

DO NOT SCALE DRAWING

NOTICE: THE INFORMATION AND DATA CONTAINED HEREIN IS CONSIDERED PROPRIETARY TO ALLTEC INTEGRATED MFG INC & SHALL REMAIN THE EXCLUSIVE PROPERTY OF ALLTEC INTEGRATED MFG INC THE HOLDER WILL ASSUME CUSTODY AND CONTROL THAT THIS DOCUMENT WILL NOT BE COPIED, REPRODUCED, OR DISCLOSED WITHOUT THE EXPRESS WRITTEN CONSENT OF ALLTEC INTEGRATED MFG INC POSSESSION OF THIS DOCUMENT DOES NOT CONSTITUTE A GRANT TO MANUFACTURE ANY ITEMS.
© 2010

TOLERANCES: UNLESS OTHERWISE SPECIFIED
DIMENSIONS ARE IN U.S. INCHES.
X.XX = .015 X.XXXX = .001
X.XXX = .010 X.X° = 1°

NEW AGE ENCLOSURES

Customer's Part No: XXX

APPROVAL	BY	DATE
CHECK		
ENG.		
SCALE		

DRAWN BY M BOYER 28-Jan-09

NEW AGE ENCLOSURES
4330 Santa Fe Road San Luis Obispo, CA. 93401
ph. (805) 595-1310 fax (805) 595-1024
www.newageenclosures.com

STANDARD - USB KEY
PXX-120704X-XXX

SIZE	DRAWING NAME	SHEET	REV.DOC
A	P120704X_R1_1	1 OF 6	1.1

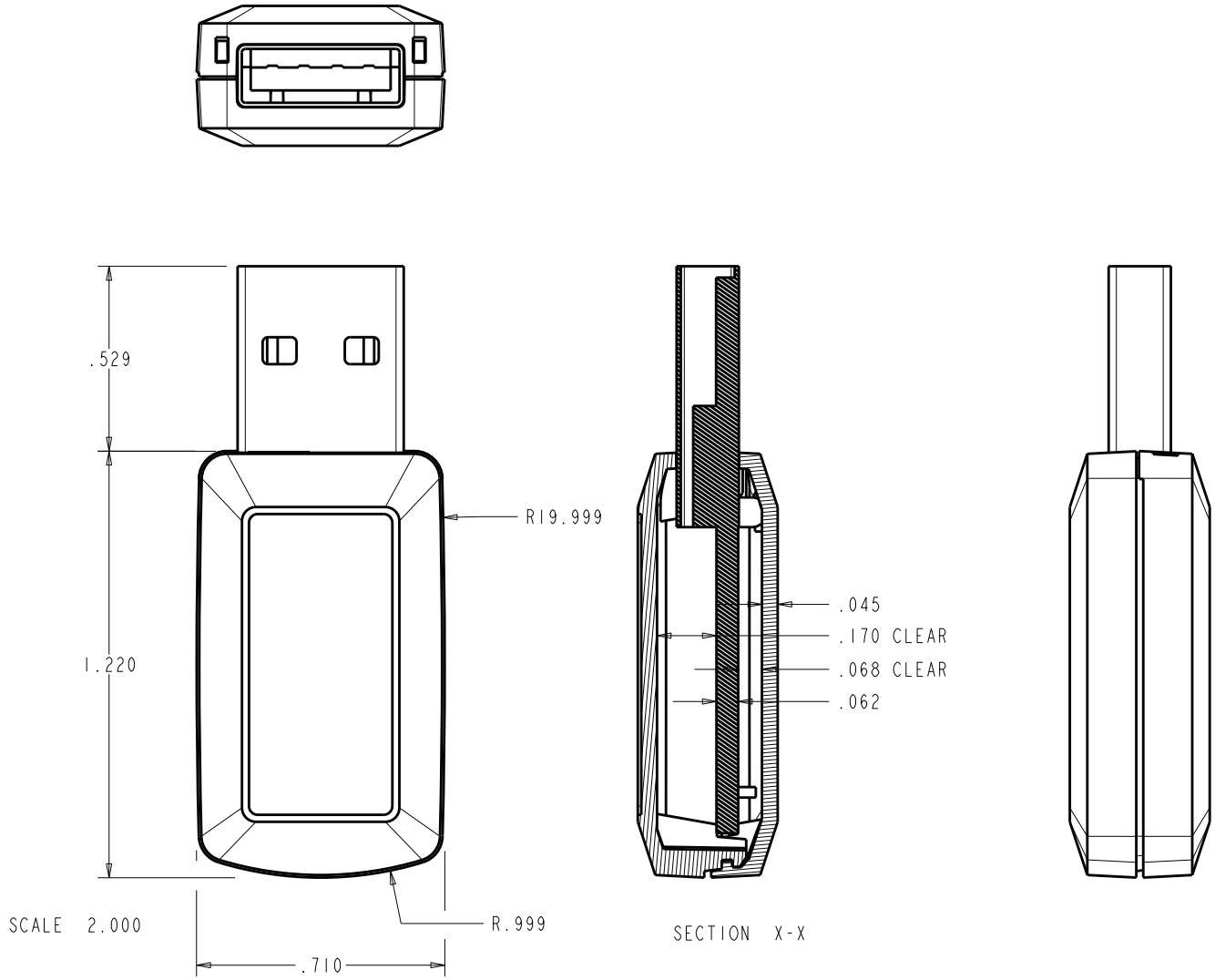

P120704U SHOWN WITH (CUSTOMER SUPPLIED) PCB

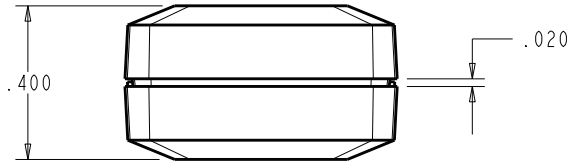

TOLERANCES: UNLESS OTHERWISE SPECIFIED DIMENSIONS ARE IN U.S. INCHES.
X.XX = .015 X.XXXX = .001
X.XXX = .010 X.X° = 1°

NEW AGE ENCLOSURES

Customer's Part No: XXX

APPROVAL	BY	DATE
CHECK		
ENG.		
SCALE		

DRAWN BY M BOYER 28-Jan-09

NEW AGE ENCLOSURES
4330 Santa Fe Road San Luis Obispo, CA. 93401
ph. (805) 595-1310 fax (805) 595-1024
www.newageenclosures.com

STANDARD - USB KEY
PXX-120704X-XXX

SIZE	DRAWING NAME	SHEET	REV.DOC
A	P120704X_R1_1	2 OF 6	1.1

P120704X COVER

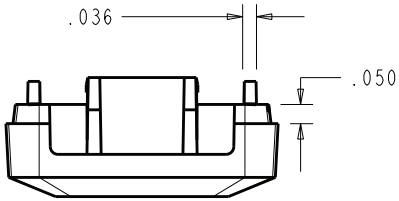

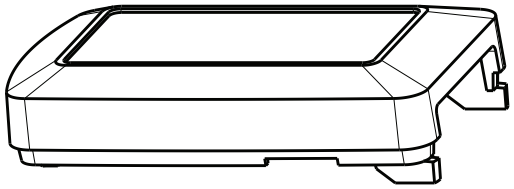

SCALE 2.000

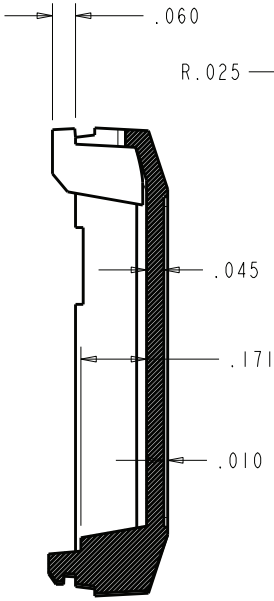

SECTION G-G

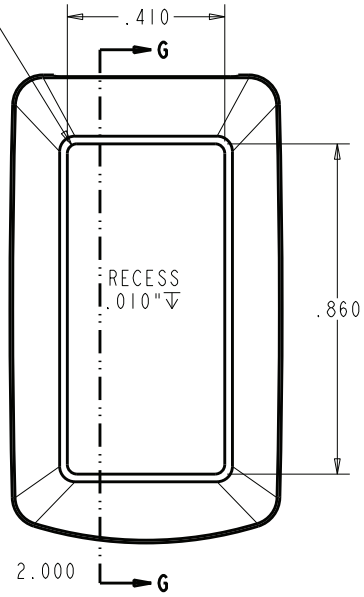

SCALE 2.000

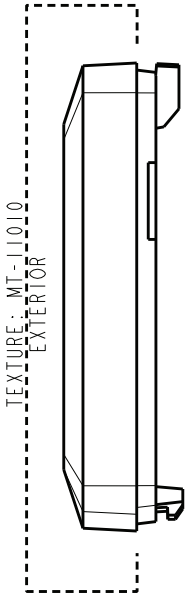

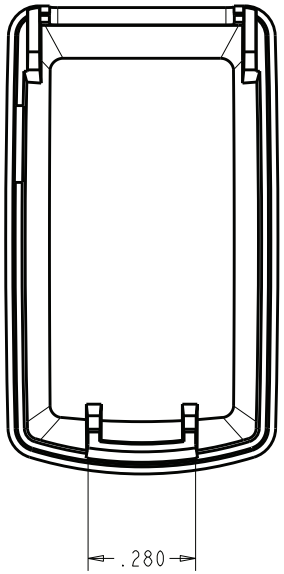

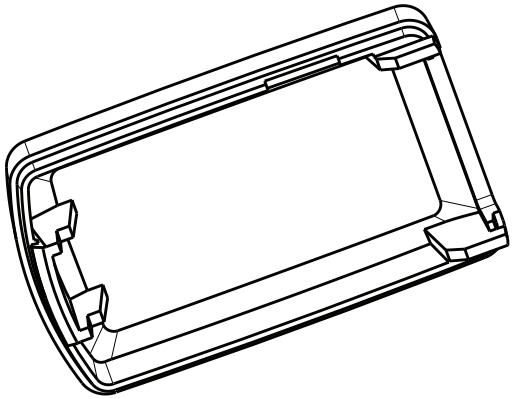

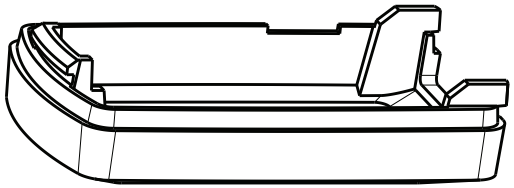

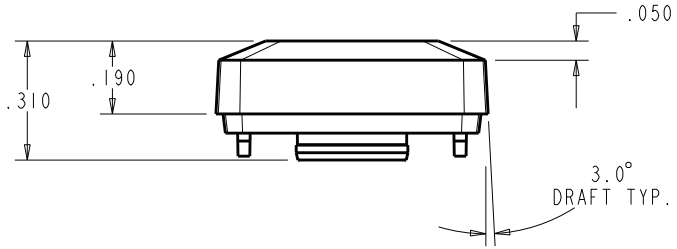

TOLERANCES: UNLESS OTHERWISE SPECIFIED DIMENSIONS ARE IN U.S. INCHES. X.XX = .015 X.XXX = .001 X.XXX = .010 X.X° = 1°	NEW AGE ENCLOSURES 4330 Santa Fe Road San Luis Obispo, CA. 93401 ph. (805) 595-1310 fax (805) 595-1024 www.newageenclosures.com		
NEW AGE ENCLOSURES			
Customer's Part No: XXX			
APPROVAL / BY / DATE	STANDARD - USB KEY PXX-120704X-XXX		
CHECK			
ENG.			
SCALE			
DRAWN BY M BOYER 28-Jan-09	SIZE A	DRAWING NAME P120704X_R1_1	SHEET 3 OF 6 / REV.DOC 1.1

P120704X BASE

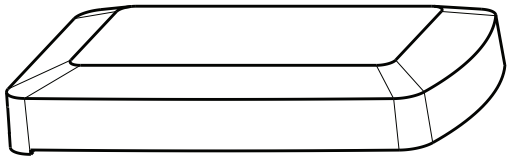

SCALE 2.000

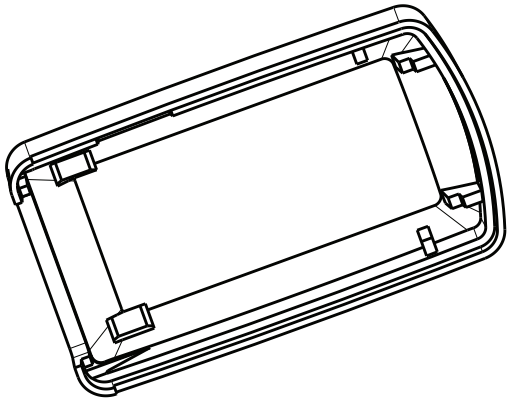

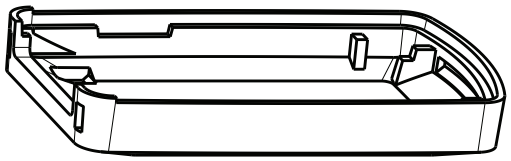

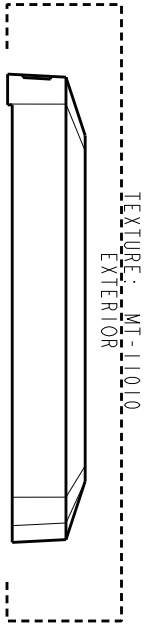

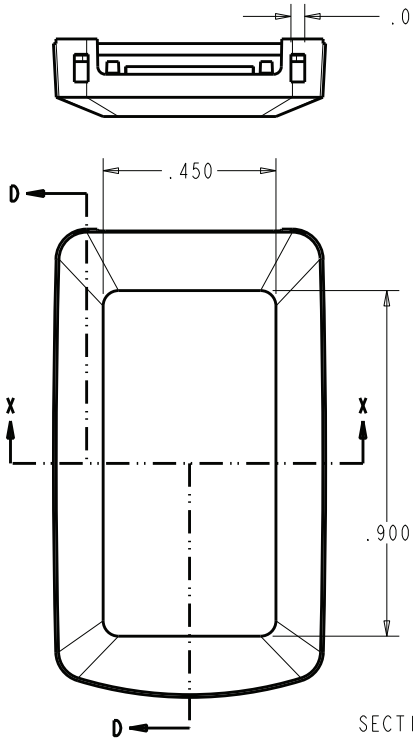

SCALE 2.000

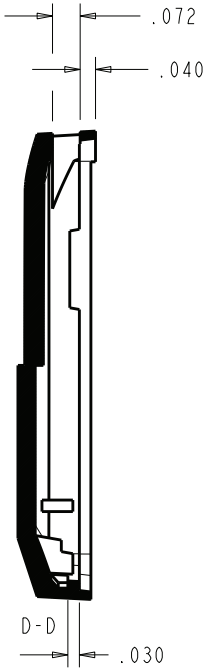

SECTION D-D

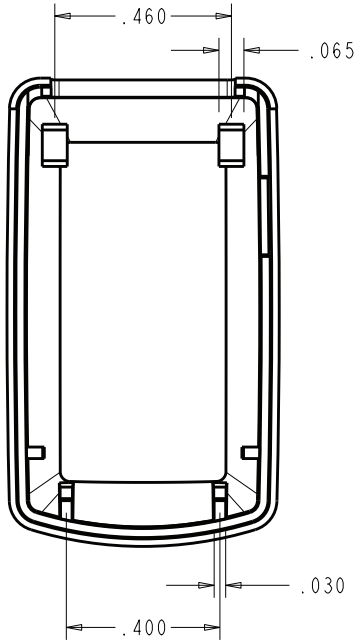

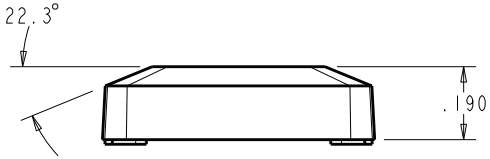

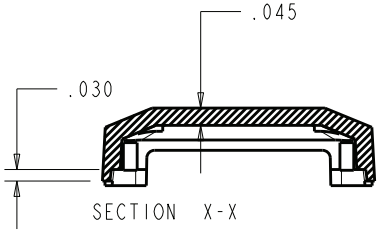

SECTION X-X

TOLERANCES: UNLESS OTHERWISE SPECIFIED DIMENSIONS ARE IN U.S. INCHES. X.XX = .015 X.XXXX = .001 X.XXX = .010 X.X° = 1°		NEW AGE ENCLOSURES 4330 Santa Fe Road San Luis Obispo, CA. 93401 ph. (805) 595-1310 fax (805) 595-1024 www.newageenclosures.com	
NEW AGE ENCLOSURES			
Customer's Part No: XXX			
APPROVAL / BY / DATE		STANDARD - USB KEY PXX-120704X-XXX	
CHECK			
ENG.			
SCALE			
DRAWN BY M BOYER 28-Jan-09	SIZE A	DRAWING NAME P120704X_R1_1	SHEET 4 OF 6 / REV.DOC 1.1

P120704X PCB - CUSTOMER SUPPLIED

PCB SIZES ARE RECOMMENDATIONS ONLY. FINAL SIZES AND VERIFICATION OF IT'S FIT ARE THE SOLE RESPONSIBILITY OF THE OEM.

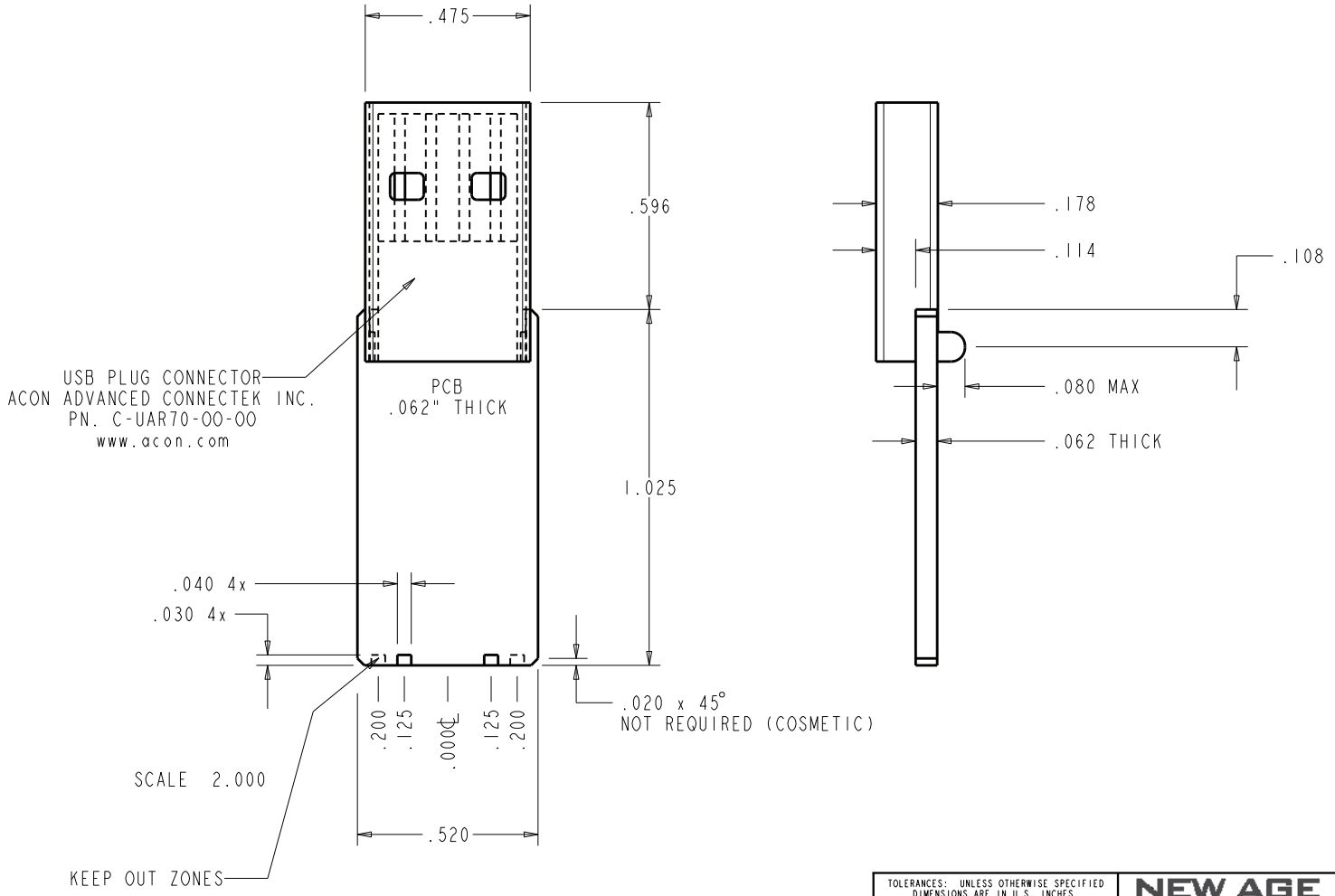

TOLERANCES: UNLESS OTHERWISE SPECIFIED DIMENSIONS ARE IN U.S. INCHES. X.XX = .015 X.XXXX = .001 X.XXX = .010 X.X° = 1°		NEW AGE ENCLOSURES 4330 Santa Fe Road San Luis Obispo, CA. 93401 ph. (805) 595-1310 fax (805) 595-1024 www.newageenclosures.com	
NEW AGE ENCLOSURES			
Customer's Part No: XXX			
APPROVAL / BY / DATE		STANDARD - USB KEY PXX-120704X-XXX	
CHECK			
ENG.			
SCALE			
DRAWN BY M BOYER 28-Jan-09	SIZE A	DRAWING NAME P120704X_R1_1	SHEET 5 OF 6 / REV.DOC 1.1

2nd OPERATION DETAILS

NEW AGE ENCLOSURES DELIVERS YOUR ENCLOSURE MARKET-READY WITH IN-HOUSE
CNC MACHINING, PAD PRINTING, ASSEMBLY, AND FULFILLEMENT.
ALL SURFACES AND AREAS ARE AVAILABLE FOR CNC ALTERATION BY NEW AGE ENCLOSURES
CALL (805) 595-1310 FOR PRICING AND SCHEDULE.
THE INSIDE RADIUS OF ANY MACHINED FEATURES SHOULD BE NO SMALLER THAN .031"

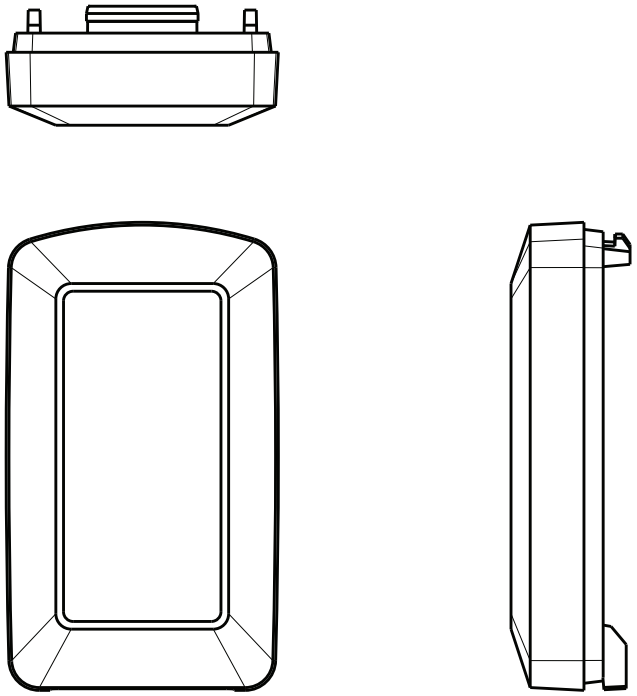

P120704X COVER
SCALE 2.000

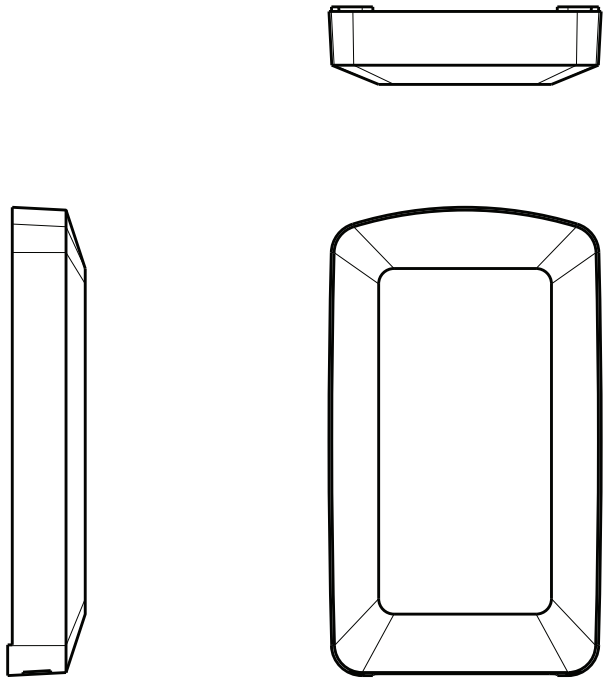

P120704X BASE
SCALE 2.000

PXX-120704X-XXX COVER - ABS, BLACK

STEP NO	DESCRIPTION	CUTTER	FIXTURE	ORIENTATION	PROGRAM
1	-	T2 = .062" EM	-	-	oXXXX
2	-	T2 = .062" EM	-	-	oXXXX

PXX-120704X-XXX BASE - ABS, BLACK

STEP NO	DESCRIPTION	CUTTER	FIXTURE	ORIENTATION	PROGRAM
3	-	T2 = .062" EM	-	-	oXXXX
4	-	T2 = .062" EM	-	-	oXXXX

TOLERANCES: UNLESS OTHERWISE SPECIFIED
DIMENSIONS ARE IN U.S. INCHES.
X.XX = .015 X.XXXX = .001
X.XXX = .010 X.X° = 1°

NEW AGE ENCLOSURES

Customer's Part No: XXX

APPROVAL	BY	DATE
CHECK		
ENG.		
SCALE		
DRAWN BY	M BOYER	28-Jan-09

NEW AGE ENCLOSURES
4330 Santa Fe Road San Luis Obispo, CA. 93401
ph. (805) 595-1310 fax (805) 595-1024
www.newageenclosures.com

STANDARD - USB KEY
PXX-120704X-XXX

SIZE	DRAWING NAME	SHEET	REV.DOC
A	P120704X_R1_1	6 OF 6	1.1